DVI EXTENDER (Monitor Side)

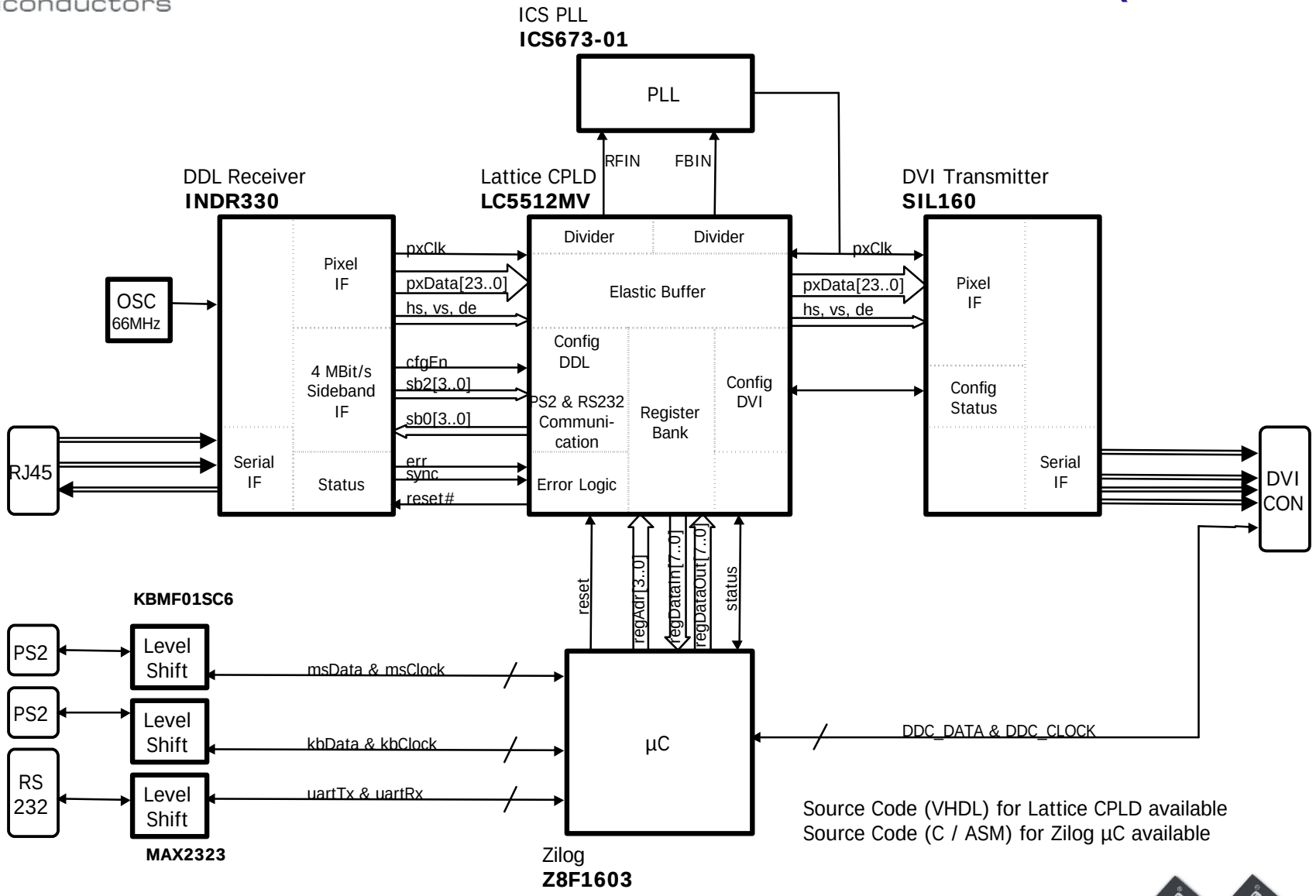

Source Code (VHDL) for Lattice CPLD available
Source Code (C / ASM) for Zilog µC available

DVI EXTENDER (Host Side)

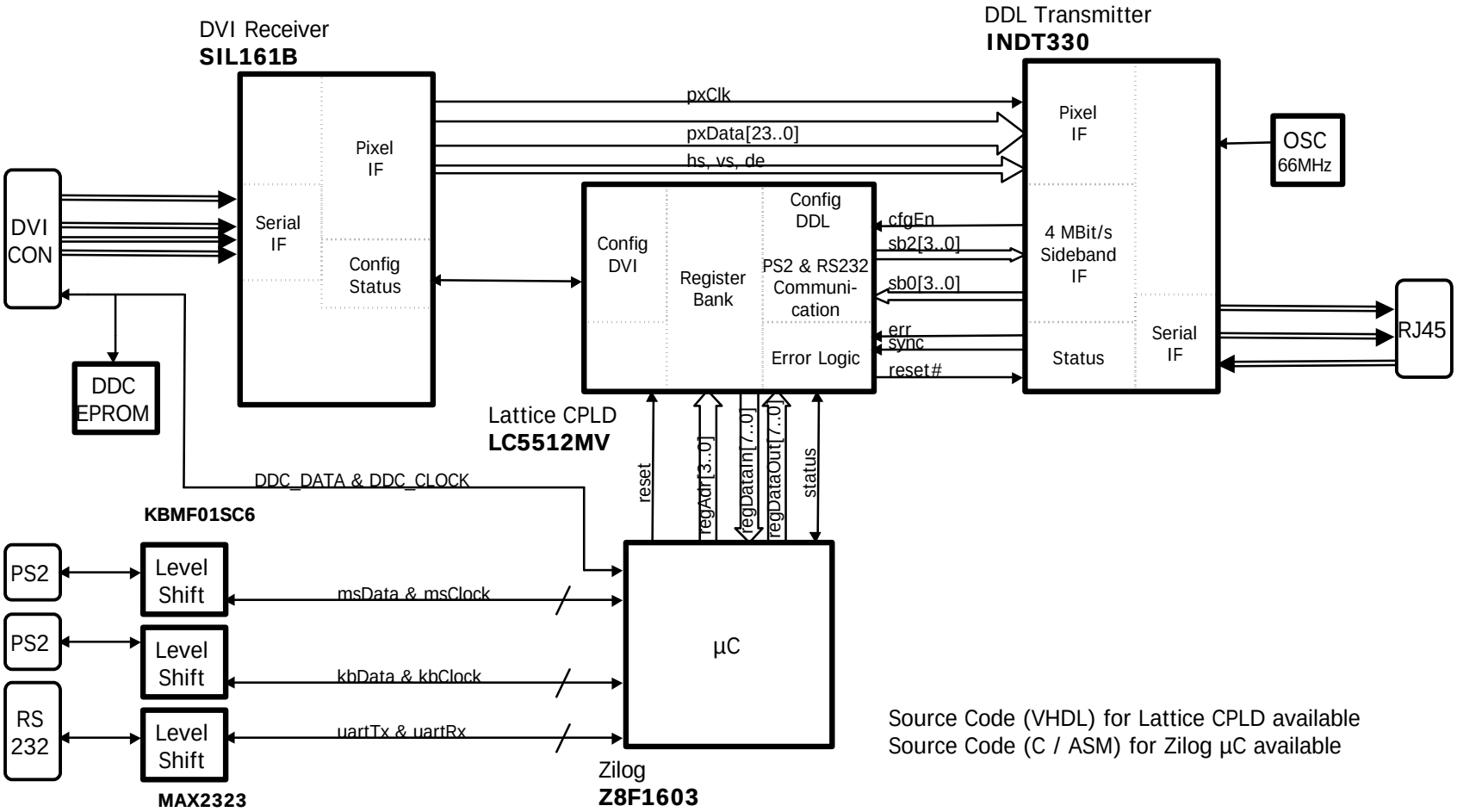

Source Code (VHDL) for Lattice CPLD available
Source Code (C / ASM) for Zilog µC available